HELI

4-5 t
K2 series Internal Combustion Counterbalanced Forklift Truck

K2 series 4-5t internal combustion forklift truck not only has strong and tough appearance but also has modern and beautiful style. Its core parts have been fully verified by the market and are mature and reliable. The whole truck highlights the traditional attributes of durability and high cost performance. The truck integrates R & D design concepts of "safety", "reliability" and "high efficiency" and "comfort" and combines technical exploration and design innovation in the field of internal combustion forklift truck in nearly half a century and the latest technology and process development.

Complete hard core configuration

- Engine configuration is rich and a number of powerful and low emission engines are optional. The tuck has strong capacity and is suitable for high duty application to meet your requirements.
- Standard configuration of HELI homemade drive axle has high casting accuracy and strong strength which guarantees safety.
- Transmission box configuration is rich. Single lever mechanical transmission box, double lever mechanical transmission box and hydrodynamic transmission box have been fully verified by the market and they are mature and reliable, and you can choose without worry.
- The tyre of steering axle is equipped with Zhengxin 7.00-12-14PR tyre with plying rating 14 which has the characteristics of high bearing capacity, wear resistance and long service life.

More reliable

- The brake system has been upgraded. Hardness improved brake drum, optimized brake and upgraded brake master cylinder effectively improve the braking reliability and comfort.
- The hydrodynamic truck adopts hydraulic assisted braking system, which has better working environment tolerance (such as dust), and the braking performance is more stable and reliable.
- Enlarged high positioned air inlet grid makes air intaking smoother and the using of engine power more sufficiently.
- Large screen LCD instrument overally monitor truck state. The standard power supply main contactor realizes power-off protection. Mature and reliable electro-hydraulic reversing box and control box are adopted.
- High strength alloy steel is used for mast channel steel, the tensile strength and safety factor of chain are significantly improved, and the work is more safe and reliable.

More efficient

- Enlarged diameter of hydraulic system pipelines, optimized pipeline arrangement and reduced temperature of hydraulic oil greatly improves the service life of hydraulic components and reduces the use and maintenance cost in the life cycle.
- The application of double pump confluence hydraulic system provides oil supply as required. The front pump and rear pump flow together only when the mast is lifting. It is energy saving and high efficient.
- Standard configuration of LED lights is energy saving and environment friendly and has long service life and higher reliability.
- Standard configuration of load sensor gives priority to steering, reduces energy loss and reduces using cost.

More excellent

- Optimized cooling channel and standard configuration of enlarged aluminum plate fin radiator improve cooling performance greatly and thus improve the reliability of key parts such as transmission box and engines.
- Standard configuration of air cleaner alarm reminds customer to maintain the air cleaner in time so as to protect engine and improve engine reliability.
- The transmission system matching with HUTCHINSON cushions offers a perfect matching between service life and vibration reduction effect after professional calculation (hydrodynamic truck).
- Optimized bi-wiring screw lock mechanism makes locking adjusting more convenient. The hydraulic truck is upgraded with a new intelligent shift system to prevent the starting from second gear and improve the working reliability of the gearbox.

More comfortable

- Optimized brake pedal and accelerator pedal and automobile operation mode improve driving comfort.
- Small diameter steering wheel offers efficient and convenient operation, reduces the operation intensity and improves the driver's operation convenience.
- Integrated handle switch (hydrodynamic truck) and standard lifting cylinder lower buffer offer new driving experience.
- Enlarged grained leather antiskid handle, half enclosed seat, instrument backlight design, anti-skid metal pedal and hood lock make the operation more comfortable.

ANHUI HELI CO., LTD.
Add / No.668, FangXing Road, Hefei, China
Fax / +86-551-63639966

Tel / +86-551-63639068(America); 63639258(Europe);
63639358(Asia); 63662105(Africa & Middle East);
63639530(Key Accounts Division); 63662105(Wheel loader)

Design&Print:Fokeli Printing 20201023

HELI

4-5 t
K2 series Internal Combustion Counterbalanced Forklift Truck

www.heliforklift.net

FICS HELI Intelligent Fleet Management System (optional)

FICS HELI intelligent fleet management system is an information system using cloud computing and Internet of things technology. It can help fleet managers to know the operation of the fleet and the performance of drivers in real time. The system software platform integrates the information and data collected by intelligent terminals to provide optimization analysis for operation investment, equipment maintenance and operation efficiency. HELI intelligent fleet management system can customize the solution of fleet optimization for you, and make your team the performance champion through the continuous optimization management.

Standard

- **Asset management:** multi organization decentralization management, truck basic information information management.
- **Truck positioning:** GPS / base station positioning, truck trajectory playback.
- **State monitoring:** truck on and off, voltage, electricity, working time and other state information monitoring.
- **Fault reminder:** fault code, truck fault alarm.
- **Maintenance management:** automatically remind maintenance information and maintenance scheduling record management.
- **Intelligent report:** operation record, working hours.
- **App Management:** control the running state of the fleet anytime and anywhere.

Optional

- **Personnel management:** authority control, trucks can only be started after passing identity authentication;
- **Safety management:** detect and record overload, collision, overspeed and other safety incidents, to improve the driving compliance.

Standard	Optional		Optional attachments
Wide view mast	Cab	High exhausting	Side shifter
Standard fork	Heater	Protective bush for steering cylinder	Paper roll clamp
Standard backrest	Air conditioner	Protective bush for tilting cylinder	Rotating fork
Standard overhead guard	Overhead guard for operation	Custom madecolor	Cargo boom
Rain proof hood of overhead guard	in container	Protective net for counter weight	Drum clamp
Lcd combined instrument	Windshield glass	(steel protective net)	Rotating clamp
Pneumatic tyre	Iron sheet celling	Fuel tank lock	Fork extension
Traction pin	Dual air cleaner	Integrated horn button	Load stabilizer
Attached tools	Solid tyre	Slings	Tilting fork
Led signals	Dual tyre	Suspension seat	Tilting bucket
Standard sea	Fan	Custom madecolor	Sanitation fork
Control valve	Warning light	Fics	Dual jib
Backward buzzer	Rear working light		Sideshifting tilting fork
Hour meter	Reversing image, reversing radar		Boom
Adjustable steering column	Overspeed alarm		Hook
Rearview mirror	Fire extinguisher		
Combined instrument	Purification muffler		
Torque converter oil level gauge	Outfire muffler		
	Widen backrest		

Manufacturer and Technical Data

	Characteristics											
1.01	Manufacturer			HELI								
1.02	Model			CPC40	CPCD40	CP(Q)YD40	CPC45	CPCD45	CP(Q)YD45	CPC50	CPCD50	CP(Q)YD50
1.03	Power mode			Diesel		LPG	Diesel		LPG	Diesel		LPG
1.04	Rated capacity	Q	kg	4000			4500			5000		
1.05	Load center distance	c	mm	500								
1.06	Driving mode			Seated								
	Dimensions											
2.01	Max. height,extended (With backrest)	H2	mm	4250								
2.02	Free lifting height	H	mm	3000								
2.03	Height (mast lowered)	H1	mm	2275								
2.04	Free lifting height	H3	mm	150								
2.05	Backrest height (calculated from the surface of the fork)	H13	mm	1250								
2.06	Distance from the surface of the seat to the overhead guard	H6	mm	1250								
2.07	Height of overhead guard	H4	mm	2350								
2.08	Overall length (with/without fork)	L/L'	mm	4460/3240								
2.09	Front overhang	L2	mm	560								
2.10	Rear overhang	L3	mm	580								
2.11	Wheelbase	L1	mm	2100								
2.12	Towing coupling height	H9	mm	300								
2.13	Ground clearance (laden,between mast)	H5	mm	175								
2.14	Overall width	W1	mm	1480								
2.15	Distance across fork-arms, Max./Min.	W5	mm	1340/300								
2.16	Tread, front/rear	W3/W2	mm	1180/1190								
2.17	Min. outside turning radius	r	mm	2930								
2.18	Min. internal turning radius	r'	mm	215								
2.19	Min.right angle stacking aisle width	Ra	mm	2900								
2.20	Right angle stacking aisle width for pallet 1000 x1200mm	α/β	deg	4690								
2.21	Right angle stacking aisle width for pallet 800 x1200mm	L4xWxT	mm	4890								
2.22	Mast tilt angle (forward/backward)	Ast	mm	6/12								
2.23	Fork size	Ast	mm	1070x150x50								
	Weight											
3.01	Total weight		kg	6290	6460		6490	6660		6750	6920	
3.02	Axle load (laden,front/rear)		kg	8675/1615	8815/1645		9600/1390	9680/1480		10430/1320	10500/1420	
3.03	Axle load (unladen,front/rear)		kg	2772/3518	2776/3694		2830/3660	2865/3795		2860/3890	2965/3955	
	Wheels											
4.01	Wheels,number front/rear (x=driven wheels)			2X/2(Double-tyre 4X/2)								
4.02	Tyre type			Pneumatic tyre								
4.03	Tyre size,front			8.25-15-14PR						300-15-18PR		
4.04	Tyre size,rear			7.00-12-14PR						7.00-12-14PR		
4.05	Double-tyre size (front/rear)			8.25-15-14PR/7.00-12-14PR								
	Other data											
5.01	Service brake			Vacuum assisted braking-pedal type (mechanical truck)/ hydraulic assisted braking-pedal type(hydrodynamic truck)								
5.02	Parking brake			Mechanical-hand lever								
5.03	Fuel tank capacity			90								

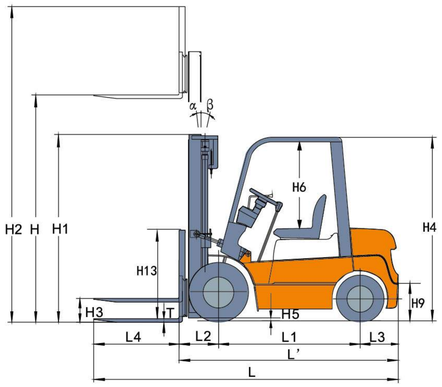

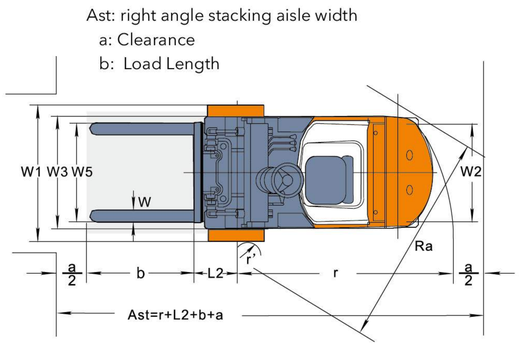

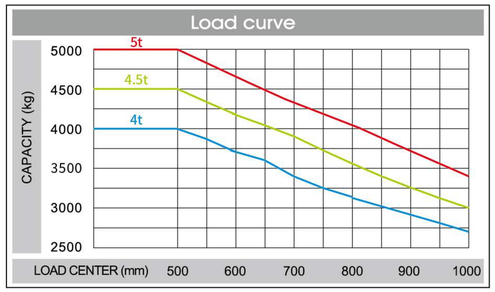

Note: The vertical axis stands for load capacity and the horizontal axis stands for load center which is calculated from the front of the fork. The base point of the standard load refers to the center position of the cube with 1000mm length of side. When mast is tilted forward, nonstandard fork usage or load with over wide goods, load capacity will be reduced. Different load capacity in different load center can be known in time through load chart.

Technical parameters

Truck performance parameters						
Model		CPC40/45/50	CPC40/45/50	CPCD40/45/50	CPCD40/45/50	CP(Q)YD40/45/50
Configuration number		QC5K2/QC7K2/XC5K2	QC4K2/QC8K2/ XC6K2/WX8K2	QC5K2/QC7K2/ XC7K2/WX7K2	M4K2	KU2K2
Transmission geers (front/rear)		shifting with single lever (forward 3 backward 2)	shifting with dual lever (forward 2 backward 2)	Electrohydraulic reversing (forward 2 backward 1)		
Travel speed (laden/unladen)	km/h	21/21.6	18/18.5	24/25	25/26	25/26
Lift speed (laden/unladen)	mm/s	500/530		530/560	440/500	530/580
Lowering speed (laden/unladen)	mm/s	400/430				
Max.drawbar pull (laden/unladen)	kN	31/20	30/20	39/22	28/22	28/22
Max.gradeability (laden/unladen)	%	24/20	22/20	26/20	⩾20	⩾20

Model and main parameters of optional engines

Engine model	Engine instruction	Truck model	battery voltage/ capacity (V/Ah)	rated power/ speed (Kw/rpm)	rated torque/ speed (Nm/rpm)	engine displacement (L)	engine cylinder number-cylinder borexstroke	emission standard
Quanchai 4C6-85U32	498 electronic unit pump +supercharge	CPC40~50-QC5K2 CPC40~50-QC4K2 CPCD40~50-QC5K2	24/80	62.5/2200	300/1600-1800	3.47	4-98×115	China III
Xinchang 4D35ZG31	498 electronic unit pump +supercharge	CPC40~50-XC5K2 CPC40~50-XC6K2 CPCD40~50-XC7K2	24/80	60/2200	300/1600-1800	3.47	4-98×115	China III
Xichai 4DX23-82GG3U	4102 electronic unit pump +supercharge and mid-cooling	CPC40~50-WX8K2 CPCD40~50-WX7K2	24/80	60/2200	320/1400-1700	3.85	4-102x118	China III
Quanchai 4C6-88C31	498 electric controlled high pressure common rail system	CPC40-50-QC7K2 CPC40-50-QC8K2 CPCD40-50-QC7K2	12/80	65/2200	350/1800	3.47	4-98×115	China III
Mitsubishi S6S	mechanical pump +naturally aspirated	CPCD40-50-M4K2	24/80	52/2300	248/1700	4.996	6-94x120	China III/ Euro III A
Kubota WG3800 (Non-certificated type)	LPG/ gasoline dual fuel	CPQYD40-50-KU2K2	12/80	60.7/2400	273/1200	273/1200	4-100x120	
Kubota WG3800 (Non-certificated type)	LPG single fuel	CPYD40-50-KU2K2	12/80	63.2/2400	282.4/1200	282.4/1200	4-100x120	

4-5t Wide View Standard Mast

Mast model	Max.lifting height (mm)	Load capacity (load center 500mm)			service weight			mast overall height (fork to the ground)	mast tilting angle α/β
		4t	4.5t	5t	4t	4.5t	5t		
M260	2600	4000	4500	5000	6244(6414)	6444(6614)	6704(6874)	2075	6°/12°
M270	2700	4000	4500	5000	6256(6426)	6456(6626)	6716(6886)	2125	6°/12°
M300	3000	4000	4500	5000	6290(6460)	6490(6660)	6750(6920)	2275	6°/12°
M330	3300	4000	4500	5000	6324(6494)	6524(6694)	6784(6954)	2425	6°/12°
M350	3500	4000	4500	5000	6347(6517)	6547(6717)	6807(6977)	2525	6°/12°
M370	3700	4000	4500	5000	6370(6540)	6570(6740)	6830(7000)	2625	6°/12°
M400	4000	4000	4500	5000	6459(6629)	6659(6829)	6919(7089)	2825	6°/6°
M425	4250	3800 *4000	4300 *4500	4700 *5000	6488(6658)	6688(6858)	6948(7118)	2950	6°/6°
M450	4500	3700 *4000	4200 *4500	4500 *5000	6517(6687)	6717(6887)	6977(7147)	3075	6°/6°
M475	4750	3500 *3700	4000 *4200	4250 *4600	6546(6716)	6746(6916)	7006(7176)	3200	6°/6°
M500	5000	3200 *3400	3600 *4000	4000 *4200	6573(6743)	6773(6943)	7033(7203)	3325	6°/6°
M550	5500	2900 *3200	3200 *3600	3600 *3800	6679(6849)	6879(7049)	7139(7309)	3575	3°/6°
M600	6000	2600 *2900	3000 *3200	3300 *3600	6735(6905)	6935(7105)	7195(7365)	3825	3°/6°

Note:* stands for the rated capacity when the front tyre is double-tyre.
In the weight column, the weight without brackets is the weight of mechanical truck (CPC type), the weight with brackets is that of hydrodynamic truck (CPCD type, CP (Q) YD type).

4-5t Full Free 2-Stage Mast

Mast model	Max.lifting height (mm)	Load capacity (load center 500mm)			service weight			mast overall height (fork to the ground)	free lifting height (with backrest)	mast tilting angle α/β
		4t	4.5t	5t	4t	4.5t	5t			
ZM261	2610	4000	4500	5000	6340(6510)	6540(6710)	6800(6970)	2110	900	6°/12°
ZM271	2710	4000	4500	5000	6355(6525)	6555(6725)	6815(6985)	2160	950	6°/12°
ZM300	3000	4000	4500	5000	6397(6567)	6597(6767)	6857(7027)	2305	1095	6°/12°
ZM330	3300	4000	4500	5000	6441(6611)	6641(6811)	6901(7071)	2455	1245	6°/12°
ZM350	3500	4000	4500	5000	6470(6640)	6670(6840)	6930(7100)	2555	1345	6°/12°
ZM375	3750	4000	4500	5000	6506(6676)	6706(6876)	6966(7136)	2680	1470	6°/12°
ZM400	4000	4000	4500	5000	6563(6733)	6763(6933)	7023(7193)	2805	1595	6°/6°
ZM450	4500	3700 *4000	4200 *4500	4500 *5000	6635(6805)	6835(7005)	7095(7265)	3055	1845	6°/6°
ZM500	5000	3200 *3400	3600 *4000	4000 *4200	6708(6878)	6908(7078)	7168(7338)	3305	2095	6°/6°
ZM550	5500	2900 *3200	3200 *3600	3600 *3800	6824(6994)	7024(7184)	7284(7454)	3555	2345	3°/6°
ZM600	6000	2600 *2900	3000 *3200	3300 *3600	6873(7043)	7073(7243)	7333(7503)	3805	2595	3°/6°

Note:* stands for the rated capacity when the front tyre is double-tyre.
In the weight column, the weight without brackets is the weight of mechanical truck (CPC type), the weight with brackets is that of hydrodynamic truck (CPCD type, CP (Q) YD type).

4-5t Full Free 3-Stage Mast

Mast model	Max.lifting height (mm)	Load capacity (load center 500mm)			service weight			mast overall height (fork to the ground)	free lifting height (with backrest)	mast tilting angle α/β
		4t	4.5t	5t	4t	4.5t	5t			
ZSM360	3600	4000	4500	5000	6541(6711)	6741(6911)	7001(7171)	2134	924	6°/6°
ZSM392	3920	3840 *4000	4350 *4500	4800 *5000	6581(6751)	6781(6951)	7041(7211)	2234	1024	6°/6°
ZSM435	4350	3500 *3800	4100 *4300	4400 *4800	6638(6808)	6838(7008)	7098(7268)	2379	1169	6°/6°
ZSM450	4500	3350 *3500	4000 *4200	4200 *4700	6658(6828)	6858(7028)	7118(7288)	2430	1220	6°/6°
ZSM470	4700	3250 *3400	3800 *4000	4050 *4300	6684(6854)	6884(7054)	7144(7314)	2496	1286	6°/6°
ZSM480	4800	3150 *3300	3700 *3900	3950 *4100	6697(6867)	6897(7067)	7157(7327)	2529	1319	6°/6°
ZDM500	5000	3050 *3200	3400 *3800	3800 *4000	6737(6907)	6937(7107)	7197(7367)	2629	1419	6°/6°
ZSM540	5400	2750 *3000	3000 *3400	3500 *3700	6814(6984)	7014(7184)	7274(7444)	2754	1544	6°/6°
ZSM600	6000	2400 *2500	2800 *3000	3150 *3400	6922(7092)	7122(7292)	7382(7552)	2994	1784	3°/6°

Note:* stands for the rated capacity when the front tyre is double-tyre.
In the weight column, the weight without brackets is the weight of mechanical truck (CPC type), the weight with brackets is that of hydrodynamic truck (CPCD type, CP (Q) YD type).

17% improved of Mast view (two-stage full free lift mast)

80% energy saved of LED lights

25% reduced of steering wheel' s steering force

30% optimized of brake force

More economical
economical price
high end configuration

Better performance
overall improved
working efficiency

More reliable
Optimized key parts
improves truck reliability.

More comfortable
Optimized ergonomics
offers new driving experience.

27% increased of brake drum' s hardness

Vibration isolation rate in idling: **68%**

66% enlarged of brake pedal dimension (hydrodynamic truck)

5% energy saved of hydraulic system

LED lights

The standard configuration of LED lights have the features of enviroment friendly.

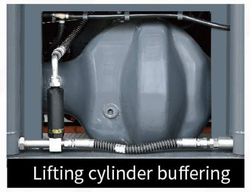
Lifting cylinder buffering

Standard configuration of buffering on the lifting cylinder offers comfort operation.

Wide view mast

Optimized mast structure effectively improves driver' s view.

Brake system

Upgraded brake drum and brake unit improves brake reliability and operation comfort.

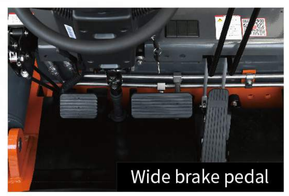
Wide brake pedal

Optimized pedal layout improves operation comfort (hydrodynamic truck) .

Tyre with plying rating 14

Standard configuration of Zhengxin tyre with plying rating 14 improves tyre service life.

Air inlet grid

Enlarged high positioned air inlet grid makes air intaking smoother and the using of engine power more sufficiently.

Front handle

Enlarged grained leather antiskid handle improves the comfort of access and egress.

Handle assembly

Standard configuration of combined handle integrating electro hydraulic reversing handle, steering and lights facilitates operation (hydrodynamic truck).

Large screen LCD instrument

Large screen LCD instrument overally monitor truck state. The instrument displays real time engine and truck fault information and humanized reminder.

Air cleaner alarm

Standard configuration of air cleaner alarm reminds customer to maintain the air cleaner in time so as to protect engine and improve engine reliability.

Bi-wiring screw lock mechanism

Optimized bi-wiring screw lock mechanism makes locking adjusting more convenient.

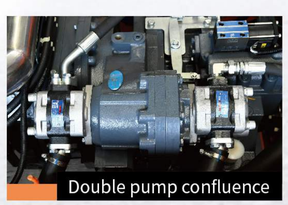
Double pump confluence

The application of double pump confluence hydraulic system provides oil supply as required and reduces energy consumption of the whole truck.

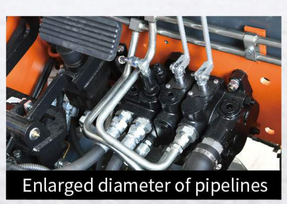
Enlarged diameter of pipelines

Enlarged diameter of hydraulic system pipelines reduces pressure loss and prolongs hydraulic system service life.

Cooling system

Enlarged aluminum plate fin radiator makes three kinds of temperature are controlled in a good range and effectively improves the reliability of the system.

Flexible connected hydraulic transmission

After nearly 30 years of market validation, the flexible connected hydraulic transmission is mature and reliable.

Latch opening mechanism

The opening mechanism of engine hood is simple and reliable. Key lock is optional.

Main contactor

Standard configuration of power main contactor realizes power cutoff when flameout to prevent spontaneous combustion caused by short circuit. The power main contactor can also realize power cutoff function in case of short circuit to protect the safety of whole electric system.

Metal pedal

Metal pedal is reliable and durable.

Clip type installation

Clip type installation of floor board makes assembly and disassembly easy.